PVC POTABLE WATER SPECIFICATIONS

1.– STANDARDS – STANDARD TO BE USED SHALL MEAN THOSE STANDARDS OF THE AMERICAN WATER WORKS ASSOCIATION IN EFFECT ON JANUARY 1, 1999. SAID STANDARDS ARE AVAILABLE FROM THE BOOKSTORE OF SAID ASSOCIATION, 6666 W. QUINCY AVENUE, DENVER, CO 80235 (800) 926–7337.

2.– MATERIALS OF CONSTRUCTION – ALL WATER PIPE, FITTINGS AND APPURTENANCES CALLED FOR IN THE THESE CONTRACT DOCUMENTS SHALL CONFORM TO THE FOLLOWING STANDARDS, THOSE OTHER STANDARDS THEREIN REFERENCED AND THESE SPECIAL PROVISIONS.

A.– PIPE: AWWA C–900 AND C–905. PIPE 12 INCHES AND SMALLER SHALL BE CLASS 150, DR–18; LARGER PIPE SHALL BE 235 PSI, DR–18. ALL PIPES SHALL HAVE BELL AND SPIGOT, ELASTOMERIC GASKETED JOINTS. PIPE SHALL BE SUPPLIED WITH AN AFFIDAVIT OF COMPLIANCE.

B.– FITTINGS: AWWA C–153 AND C–104. FITTINGS SHALL BE CEMENT–MORTAR LINED. UNLESS OTHERWISE SHOWN OR INDICATED BY THE CONTRACT DRAWINGS, BENDS SHALL BE FURNISHED WITH MECHANICAL JOINT ENDS; TEES AND CROSSES SHALL BE FURNISHED WITH FLANGED JOINT ENDS. FLANGE TO MECHANICAL JOINT ADAPTERS SHALL BE FURNISHED TO CONNECT PIPE TO TEES AND CROSSES WHERE VALVES DO NOT OCCUR. GLANDS SHALL BE OF THE SAME MANUFACTURER AS FITTINGS.

C.– GATE VALVES: AWWA C–509. VALVES 12 INCHES AND SMALLER SHALL BE RESILIENT–WEDGE GATE, FUSION–BONDED EPOXY COATED INSIDE AND OUT; AND, UNLESS OTHERWISE SHOWN OR INDICATED BY THE CONTRACT DRAWINGS, SHALL BE FURNISHED WITH A MECHANICAL JOINT ONE END AND A FLANGED JOINT THE OTHER. VALVES, WHEN CLOSED, SHALL PROVIDE A BUBBLE–TIGHT SEAL AGAINST LEAKAGE AND SHALL BE OF THE TYPE AND DESIGN THAT ALLOWS REPLACEMENT OF ALL INTERNAL PARTS WITHOUT REMOVING THE VALVE BODY FROM THE PIPELINE. ALL INTERNAL PARTS SHALL BE MATERIALS SUITABLE FOR EXPOSURE TO WATER CONTAINING CHLORINE AS A DISINFECTANT AT VARIOUS CONCENTRATIONS. VALVES SHALL BE SUPPLIED WITH AN AFFIDAVIT OF COMPLIANCE.

E.– DOMESTIC MANUFACTURERS: ALL PIPEFITTINGS AND VALVES SHALL BE THE PRODUCT OF A DOMESTIC (USA) MANUFACTURER.

F.– FIRE HYDRANTS: AWWA C–503. FIRE HYDRANTS SHALL BE OF THE WET–BARREL TYPE, ALL EQUAL TO THAT CALLED OUT IN THE CONTRACT DRAWINGS. THE BURY–ELL, RISERS AND DOUBLE GROOVED BREAK–OFF SPOOLS SHALL BE OF EPOXY COATED INSIDE, DUCTILE IRON. ALL BOLTS USED IN THE FIRE HYDRANT ASSEMBLY SHALL BE OF APPROVED STAINLESS STEEL.
THE BURY–ELL SHALL BE SUPPLIED WITH A MECHANICAL JOINT INLET AND FOR CONNECTION OF THE PIPE AND INSTALLATION OF JOINT RESTRAINT DEVICE. ALL HYDRANTS SHALL BE FURNISHED WITH OUTLET CAPS WITH CHAIN AND AN AFFIDAVIT OF COMPLIANCE.

G.– BOLTS: ALL BOLTS USED FOR INSTALLATION OF UNDERGROUND FITTINGS AND VALVES SHALL BE EITHER TEXLAN COATED OR OF APPROVED STAINLESS STEEL.

H.– AIR VALVES: AWWA C–512. ALL AIR–RELEASE VALVES, AIR–VACUUM VALVES AND COMBINATION AIR VALVES SHALL BE OF CAST–IRON BODY WITH INTERNAL PARTS OF STAINLESS STEEL, BUNA–M, DERLIN OR OTHER SIMILAR CORROSION RESISTANT MATERIALS, SUITABLE FOR EXPOSURE TO WATER CONTAINING CHLORINE AS A DISINFECTANT IN VARIOUS CONCENTRATIONS. AIR–VALVES SHALL BE EQUAL TO THAT CALLED OUT IN THE CONTRACT DRAWINGS.

I.– JOINT RESTRAINT DEVICES: ALL MECHANICAL JOINTS INCORPORATED INTO THE CONTRACT PROJECT SHALL BE FITTED WITH JOINT RESTRAINT DEVICES EQUAL TO THOSE MANUFACTURED BY EBA–IRON OF EASTLAND, TEXAS AND SOLD AS THE 2000 PV SERIES, INSTALLED IN FULL CONFORMANCE TO THE MANUFACTURER'S WRITTEN INSTRUCTIONS. THE CONTRACTOR SHALL ALSO FURNISH AND INSTALL SERIES 1600 AND 2800 PIPE JOINT HARNESSES ON A SUFFICIENT NUMBER OF JOINTS AWAY FROM THE JOINT RESTRAINT DEVICE TO INSURE AGAINST SEPARATION OF THE PIPE. A SOIL FRICTION OF 150 PSF MAY BE USED FOR CALCULATING THE NUMBER OF PIPE JOINTS TO WHICH A HARNESS MUST BE APPLIED. FOR 12–INCH PIPE, ALL JOINTS WITHIN 45 FT. MUST BE HARNESSED; FOR 18–INCH PIPE, ALL JOINTS WITHIN 65 FT. MUST BE HARNESSED.

J.– EPOXY COATINGS: AWWA C–550. EPOXY COATING CALLED FOR IN THESE SPECIAL PROVISIONS SHALL BE FUSION–BONDED AT THE FACTORY.

K.– PIPE BEDDING AND BACKFILL: GRANULAR MATERIAL FOR PIPE BEDDING AND PIPE ZONE BACKFILL TO NO LESS THAN 12 INCHES ABOVE TOP OF PIPE, SHALL CONSIST OF SAND FREE FROM CLAY OR ORGANIC MATERIAL, 90 TO 100 PERCENT PASSING THE NO. 4 SIEVE BUT NO MORE THAN 5 PERCENT PASSING THE NO. 200 SIEVE, HAVING A SAND EQUIVALENT OF NO LESS THAN 35. THE MATERIAL SHALL BE SUITABLE FOR THE COMPACTION METHODS USED TO OBTAIN NO LESS THAN 90% OF MAXIMUM RELATIVE DENSITY.

L.– CONCRETE: CONCRETE REQUIRED FOR THRUST BLOCKS SHALL BE TRANSIT MIXED, PORTLAND CEMENT CONCRETE, HAVING A SLUMP AT TIME PLACEMENT NOT EXCEEDING 6 INCHES AND CONTAINING SUFFICIENT CEMENT TO PROVIDE A COMPRESSIVE STRENGTH OF NO LESS THAN 2000 PSI IN 28 DAYS.

3.– PIPELINE CONSTRUCTION – ALL WATER PIPE, FITTINGS AND APPURTENANCES CALLED FOR SHALL BE INSTALLED, DISINFECTED AND TESTED IN ACCORDANCE WITH THE FOLLOWING REFERENCED STANDARDS, THOSE OTHER STANDARDS THEREIN REFERENCED, THE WRITTEN RECOMMENDATIONS OF THE MANUFACTURER AND THESE SPECIAL PROVISIONS.

A.– INSTALLATION: AWWA C–600 AND C–605 EXCESS EARTH FROM EXCAVATIONS SHALL BE REMOVED FROM THE ROADWAY SECTION AND DISPOSED OF. TAPE SHALL BE PLACED IMMEDIATELY ABOVE THE PIPE ZONE BACKFILL. THE TEST PRESSURE FOR PIPE STRENGTH AND LEAKAGE SHALL BE NO LESS THAN 150 PSI.

B.– POLYETHYLENE WRAPPING: AWWA C–105. ALL FITTINGS AND APPURTENANCES INCLUDING BUT NOT LIMITED TO, VALVES, TEES, CROSSES, BENDS, TAPPED COUPLINGS, PIPE JOINT HARNESSES, JOINT RESTRAINT DEVICES, AND JOINT ADAPTERS, SHALL BE ENCASED WITHIN A WRAPPING OF LOW–DENSITY, MINIMUM 10 MIL THICK, POLYETHYLENE SHEETING LOOSELY PLACED AND TAPED TO THE BODY OF THE CONNECTED PIPE(S).

C.– DISINFECTION: AWWA C–651. THE CONTRACTOR MAY EMPLOY ANY ONE OF THE DISINFECTION METHODS PROVIDED FOR, SUBJECT TO THE CITY ENGINEER'S REVIEW AND APPROVAL OF THE CONTRACTOR'S PROCEDURES, EQUIPMENT AND PROPOSED MEANS OF DISPOSING OF THE CHLORINATED WATER. THE DEVELOPER OR CONTRACTOR SHALL ARRANGE AND PAY FOR BACTERIOLOGICAL TESTING OF THE DISINFECTION EFFORTS. DISINFECTING SHALL CONTINUE UNTIL TESTING RESULTS ARE FOUND ACCEPTABLE TO THE CITY ENGINEER.

D.– COMPACTION TESTING: TESTING OF TRENCH BACKFILL FOR DENSITY SHALL BE NO LESS OFTEN THAN ONCE IN THE PIPE ZONE AND ONCE FOR EACH 24 INCHES OF DEPTH AT SPACING NOT TO EXCEED 150 FT. FAILING TEST SHALL BE RETESTED AFTER RECOMPACTION. RETESTING SHALL INCLUDE TWO ADDITIONAL TESTS, ONE EACH LOCATED 50 FT. BOTH WAYS FROM THE FAILING TEST LOCATION UNTIL ALL TESTS SHOW CONFORMING DENSITIES.

E.– VALVE BOXES: ALL VALVES SHALL BE INSTALLED WITH VALVE BOXES AS SHOWN OR CALLED FOR BY THE CONTRACT DRAWINGS.

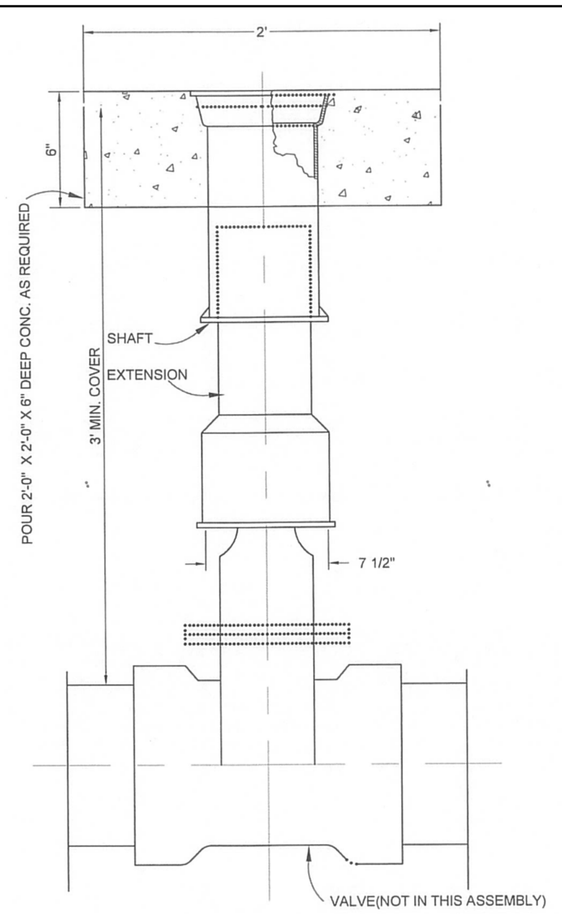

CAST IRON VALVE BOX

WATER VALVE DETAIL N.T.S.

WATER NOTES:

1. ALL WATER LINES INSTALLED SHALL BE HYDROSTATICALLY TESTED FOR LEAKAGE BASED ON THE "WATER PRESSURE TEST" SECTION OF THE MOST CURRENT VERSION OF THE "GREENBOOK: STANDARD SPECIFICATIONS FOR PUBLIC WORKS CONSTRUCTION".

2. ALL WATER LINES INSTALLED SHALL BE HIGH–CHLORINE AND BAC–T TESTED, TEST RESULTS TO BE REVIEWED FOR APPROVAL BEFORE THE WATERLINE CAN BE ACTIVATED.

3. DETECTABLE TAPE SHALL BE INSTALLED 1'–0" ABOVE THE WATERLINE.

4. ALL COMPONENTS INSTALLED ALONG THE WATERLINE (I.E. FITTINGS, GATE VALVES, COUPLINGS, BURY ELS, ETC.) SHALL BE WRAPPED IN 8 MIL POLYETHYLENE PLASTIC BEFORE ANY BACKFILL IS COMPLETED.

NOTES:

BASE:
CLASS II BASE COMPACTED TO 95% OF MAX. DENS. PER ASTM D–1557

SUBGRADE:
SUBGRADE COMPACTED TO 95% OF MAX. DENSIDAD.

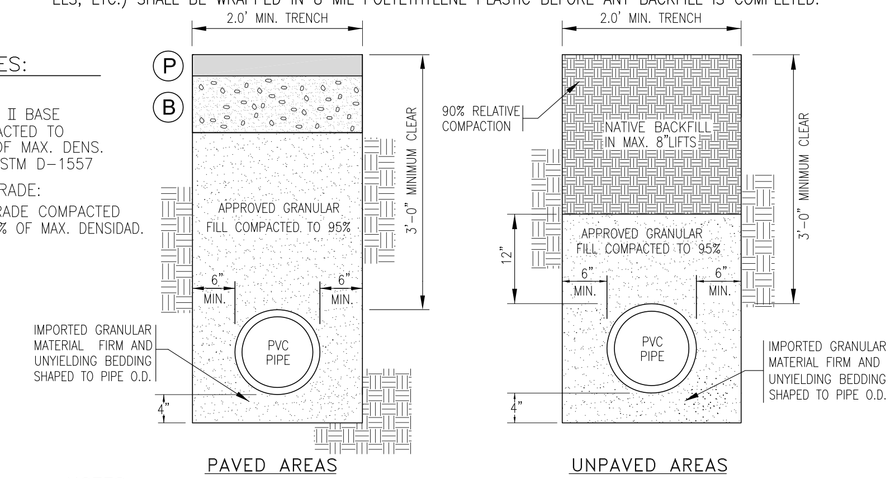

PAVED AREAS — UNPAVED AREAS

NOTES:
1. ALL ANCHOR RODS SHALL BE GALVANIZED STEEL, 1/2" DIAMETER MINIMUM, WRAPPED AROUND PIPE
2. ALL CONCRETE THRUST BLOCKS TO BEAR ON UNDISTURBED SOIL IN EACH DIRECTION OF THRUST

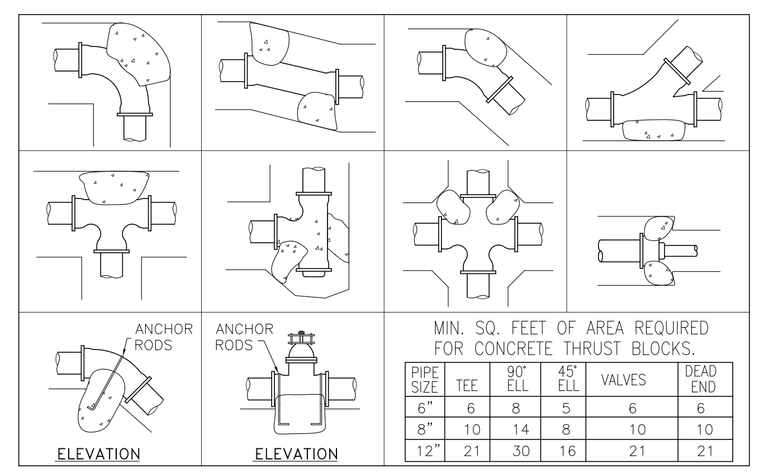

MIN. SQ. FEET OF AREA REQUIRED FOR CONCRETE THRUST BLOCKS.

PIPE SIZE	TEE	90° ELL	45° ELL	VALVES	DEAD END
6"	6	8	5	6	6
8"	10	14	8	10	10
12"	21	30	16	21	21

THRUST BLOCKS DETAILS

WATER TRENCH DETAIL N.T.S. 2

NOTE:

WATER METER SHOULD NOT BE INSTALLED IN THE NEW WATER SERVICE.

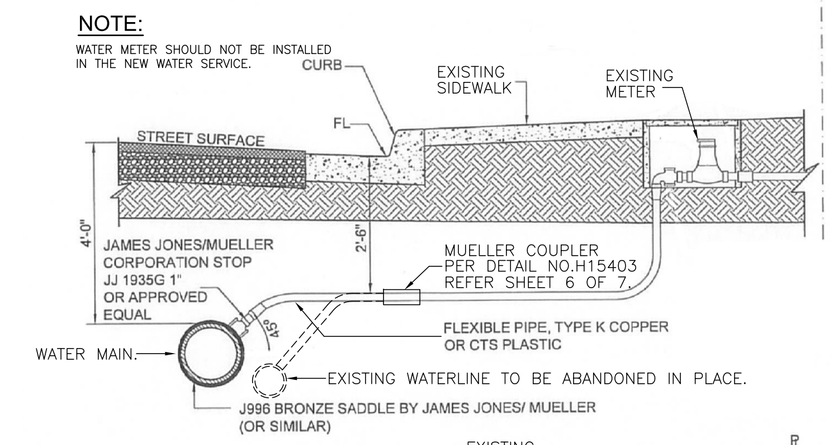

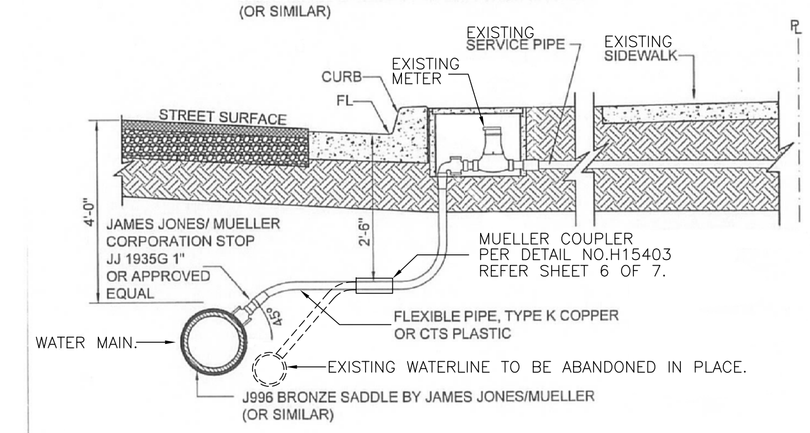

NOTE:
–ALL LOT SERVICE LATERALS TO BE INSTALLED PRIOR TO PAVING STREET.
–ALL MATERIALS TO BE REVIEWED AND APPROVED BY THE CITY PRIOR TO CONSTRUCTION.

WATER SERVICE DETAIL N.T.S. 4

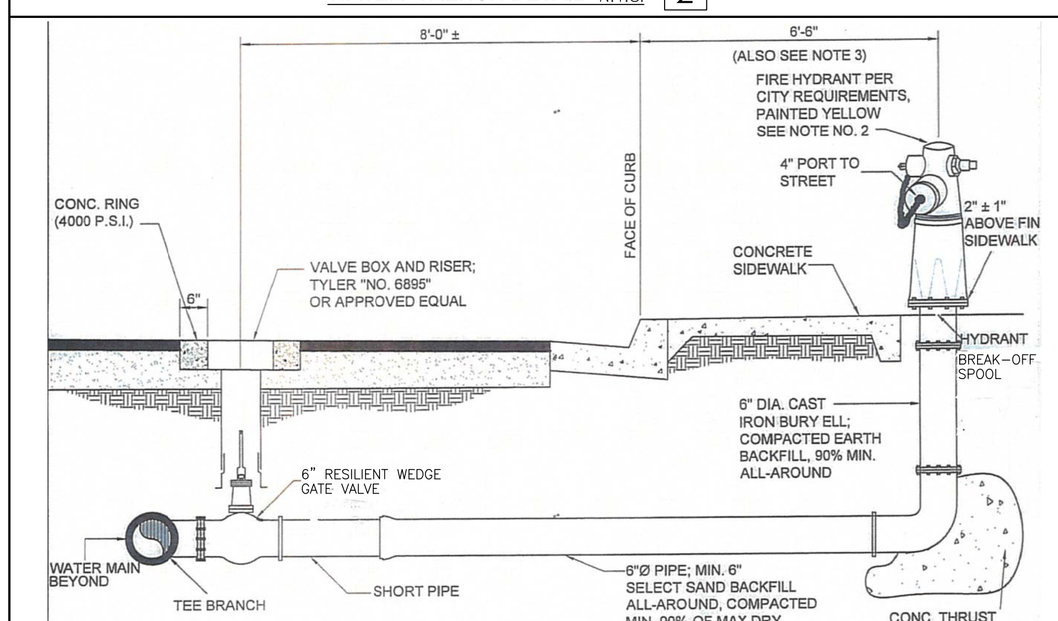

NOTES:

1. ALL EARTH BACKFILL TO BE COMPACTED 90% MIN. AND TESTED ONCE AT EACH FIRE HYDRANT LOCATION.
2. COMMERCIAL: JAMES JONES MODEL J-3765 W/ 6-HOLE PATTERN BASE; PLASTIC CAPS; AND 2-2 1/2 AND 1-4" OUTLETS.
   RESIDENTIAL: JAMES JONES MODEL J-3700 w/6 - HOLE 1-2½ & 1 - 4" OUTLET
3. FIRE HYDRANTS TO BE MIN. 6 FT. CLEAR OF OBSTRUCTIONS (I.E LIGHTS; MAIL BOXES; FENCES AND SIGNS).
4. SEE "SIDEWALK FIRE HYDRANT & UTILITY POLE LOCATION STANDARD FOR FIRE HYDRANT PLACEMENT EC-401.

FIRE HYDRANT DETAIL N.T.S. 3

No.	QTY.	DESCRIPTION	MATERIAL
1	1	SPUD	CAST BRASS ASTM B62 ALLOY C83600
2	2	CONN. NUT	CAST BRASS ASTM B62 ALLOY C83600
3	2	CTS GSKT SUB	SBR D2000 – GSKT 410ss – BAND

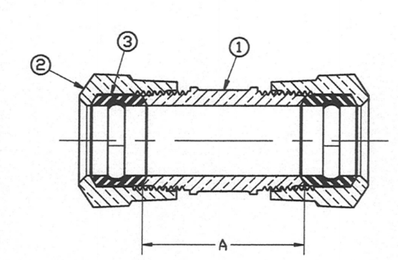

SIZE	A
1/2	1.625
3/4	2.062
1	2.406
1x3/4	1.835
1-1/4	2.375
1-1/4x1	2.154
1-1/2	3.312
1-1/2x1	2.840
2	3.375

FILEPATH: PROD-ENG\MUELLER\APPROVED\H15403

	BY	DATE
DRF'TR	RWB	6/25/03
CHKR		
ENGR		
MGR		
STK No:		
MAT'L:		

Mueller Co.

UNLESS OTHERWISE NOTED
SURFACE PREPARATION: BREAK CORNERS ---- .005
SURFACE FINISH ---- 000 RMS
TOLERANCES:
LINEAR ---------- ± .000
ANGULAR --------- ± 0°00'

THIRD ANGLE PROJECTION
REF. No. | SCALE: NONE

REV	ECR	DESCRIPTION	DATE	BY	CHKR
PER EST NO DXXXX EST FIN WT = 0.0000 lbs					

DESCR. H-15403 STRAIGHT SERVICE FITTING (110 CTS x 110 CTS)

PART NUMBER H15403

CALL BEFORE YOU DIG
UNDERGROUND SERVICE ALERT CALL: TOLL FREE 811
TWO WORKING DAYS BEFORE YOU DIG

APPROVED BY PUBLIC WORKS DIRECTOR
CITY OF WESTMORLAND
BY: _____ DATE: _____
RAMIRO BARAJAS

ENGINEER OF RECORD
PLANS PREPARED UNDER THE SUPERVISION OF
BY: ROBERTO C. MARTINEZ DATE: _____
R.C.E. NO.: 74475

REGISTERED PROFESSIONAL ENGINEER ROBERTO C. MARTINEZ No. C74475 CIVIL STATE OF CALIFORNIA

NO.	REVISION	DATE	BY

NOTE: THE ENGINEER'S SEAL AFFIXED BESIDE INDICATES THAT THE METHOD OF ANALYSIS PRESENTED IS CONSISTENT WITH ACCEPTED ENGINEERING PRACTICES AND CODE ACCEPTED DESIGN VALUES AND THAT THIS ENGINEER IS ONLY RESPONSIBLE FOR THE DESIGN OF CIVIL ENGINEERING WORK SHOWN ON THIS PLAN.

BJ ENGINEERING & SURVEYING, INC.
Phone (760) 353-3552 341 WEST CROWN CT, STE 100
Fax (760) 353-3751 IMPERIAL, CA 92251

DWR-SCDRP- Water Distribution Piping Replacement

CONSTRUCTION DETAILS AND SPECIFICATIONS

SHEET 6 OF 7

IN THE CITY OF WESTMORLAND, CA DATE: 12/12/2024 BY: R.W.

CLIENT: CITY OF WESTMORLAND JOB NO.: 23–105